Customer Requirements
Transformer Vault Installation

March 12, 2007

C-UG-1700

Scope

This standard establishes the requirements for the design and construction of vaults and covers installed by the customer for the support of padmount transformers and Tacoma Power Data systems.

In this Standard

Topic	See Page
Inspection Requirements	1
Materials & Preparation	2-4
Foundation for Vault	2
Vault & Cover Materials	3
Data Service Vault Requirements	4
Installation of Conduit	5-6
Trench Excavation and Backfill	7
Secondary Conductor	7
Sources and References	8

Inspection Requirements

Installation of a transformer, conduit, and service conductor will involve two offices of Tacoma Power.

Office	What They Do:
Tacoma Power Construction Office	Prior to installing the transformer, connecting the conduit, and pulling primary cables <u>this office must approve the installation of</u>: • transformer vault & cover • primary conduit • data conduit and vault
Tacoma Power Electrical Inspection Office	Prior to energizing the service <u>this office must approve the installation of:</u> • service conductors • service conduit • service panels • all internal wiring • facility grounding • data conduit and vault

Materials & Preparation

Figure #1 How the foundation for a transformer vault shall be prepared.

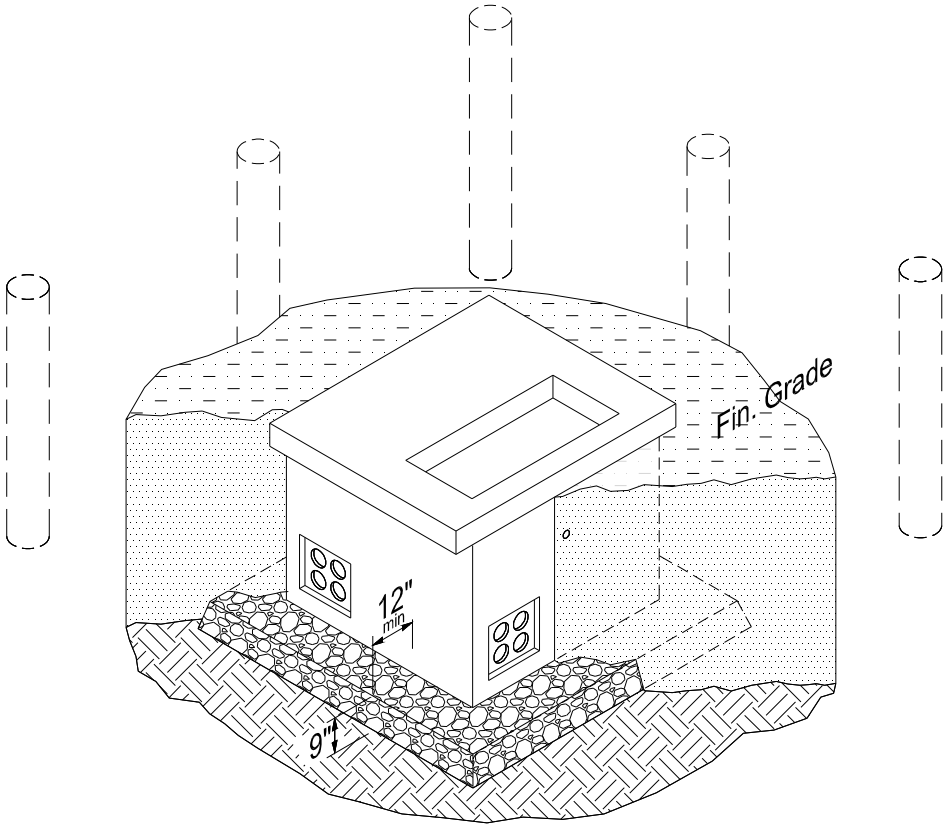

Foundation for Vault The foundation shall be prepared as follows as directed by the Tacoma Power Construction Office. Refer to Figure #1.

Issue	Action
Size of Vault Excavation	Per the conditions of the site and routing of conduits.
Backfill Material	The vault excavation shall be backfilled as listed below: • Vault Base Minimum of 9” of 5/8” minus crushed rock well compacted extending a minimum of 12 inches beyond the edge of the vault in all directions. • Up to subgrade with clean fill or better
Compaction at Subgrade	Compaction requirements will be determined by Tacoma Power Construction Office.
Final Grade	Surrounding final grade shall be to the <u>bottom</u> of the vault lid.

Materials & Preparation (continued)

Vault & Cover Materials

The table below lists the approved pre-cast 1Φ and 3Φ transformer vaults and covers.

1Φ Transformers	Approved Pre-Cast Vault
25 to 75 kVA	Tacoma Power Vault 444 with Transformer Cover. Vault: 4'-0" x 4'-0" x 3'-6" Transformer Cover: 4'-0" x 4'-0" x 6" Access opening: 28" x 12"
100 to 167 kVA	Tacoma Power Vault 554 with Transformer Cover #1. Vault: 4'-8" x 4'-8" x 3'-6" Transformer Cover #1: 4'-8" x 4'-8" x 6" Access opening: 28" x 12"

3Φ Transformers	Approved Pre-Cast Vault
30 to 300 kVA	Tacoma Power Vault 554 with Transformer Cover #2 Vault: 4'-8" x 4'-8" x 3'-6" Transformer Cover #2: 5'-6" x 4'-8" x 6" Access opening: 44" x 20"
500 to 2500 kVA	Tacoma Power Vault 774 with Transformer Cover Vault: 7'-0" x 7'-0" x 3'-6" Transformer Cover #1: 8'-0" x 8'-0" x 8" Access opening: 60" x 22"

Materials & Preparation (continued)

Sloping Installations

For transformer vaults installed on a slope, the ***minimum*** dimensions for clearances are:

Transformer Vault
Front clearance = 8 feet
Side clearance = 8 feet

Figure 1

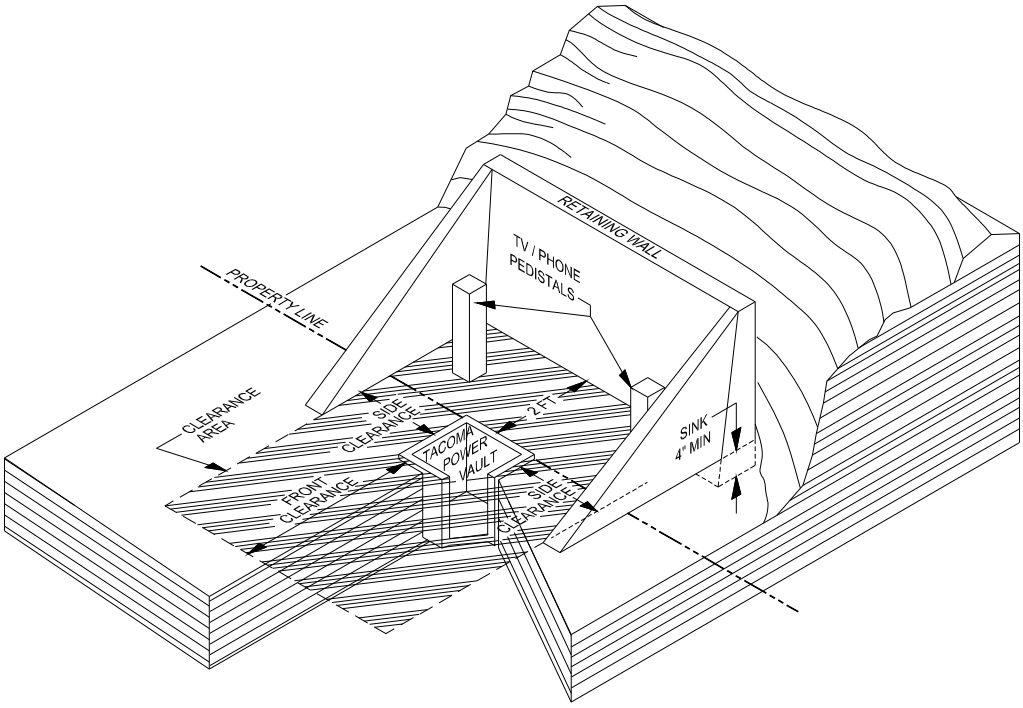

Notes:

1. The transformer vault must be kept clear of any ***obstructions***, such as:
   - Fences, mail boxes, rockeries, berms, and vegetation
   - Bark, sod, ground cover mulch, and rocks, etc., on any part of the structure
   - Trees and bushes extending into the clearance area
   - Phone and TV pedestals must be installed at the rear of pad or box on back corners as shown above
2. The clearance area grade shall be level and a retaining wall shall be provided, when required by the Tacoma Power Engineer. A wooden, concrete or rockery wall shall have a 1 to 4 maximum allowable slope to the property line.
3. Typical structures are located in a utility easement, or on a public right-of-way, not on private property

Data Service Vault Requirements

Figure 2 Tacoma Power data services uses the following service vaults:

Require-ments	Selection of Data Vault	
Up to 3 conduits (two 1" & one 2" max) non-traffic areas	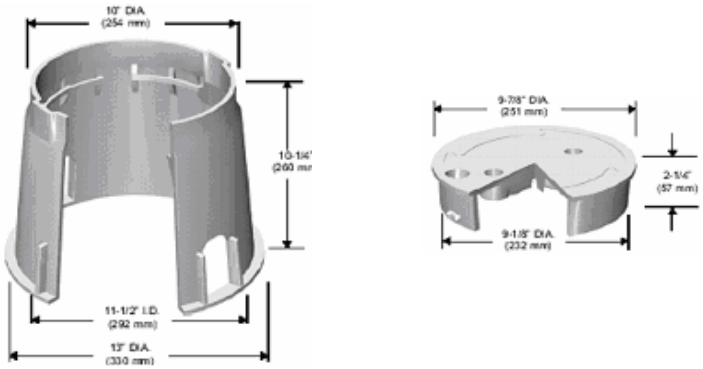 **Small** Data Service Box, Carson Brooks Part No. 910-10-4GTPUJ	
Over 3 conduits or larger conduit sizes than above	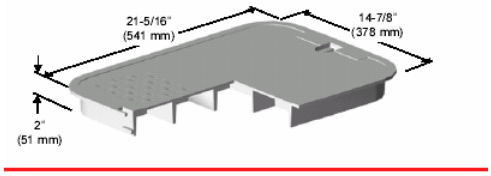 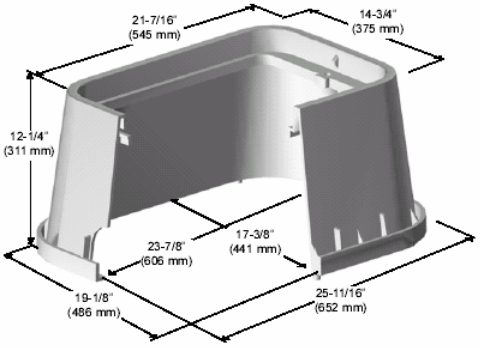 Non-traffic areas Carson Brooks# 1220-12-4GTPUM	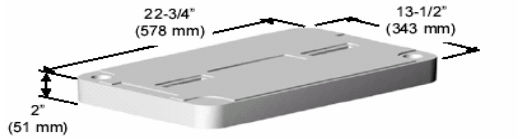 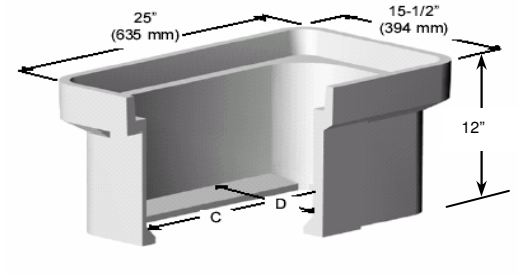 Parking areas & sidewalks (H-10 Rated) Carson Brooks# GLB132412F25C51

Installation of Conduit

Figure #3 General Vault and Conduit Layout

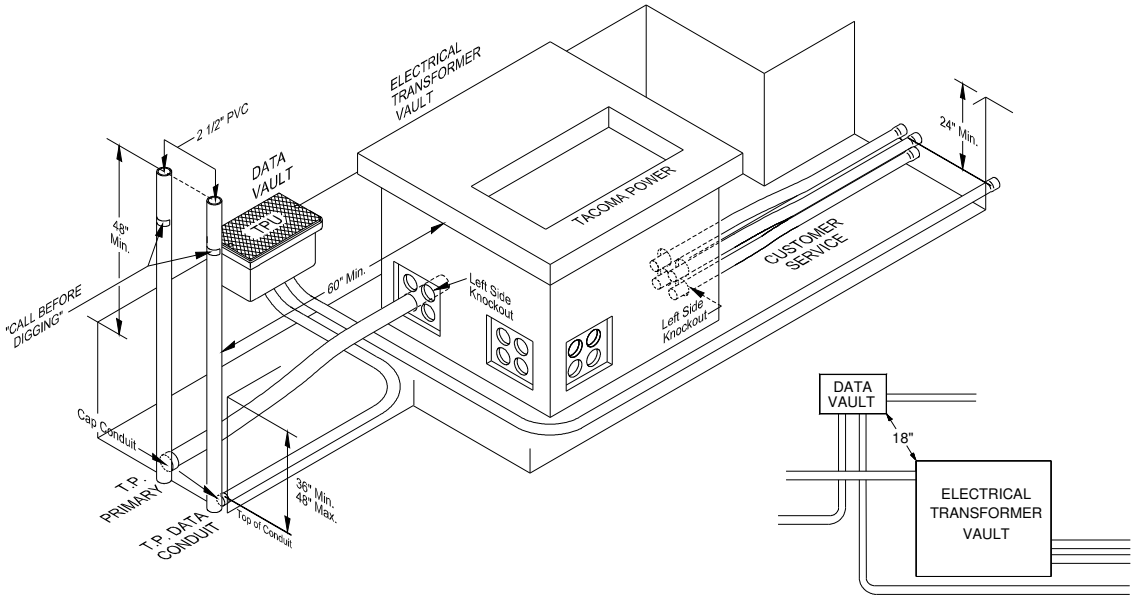

Data Conduit The Data conduit shall be terminated into the data vault from the bottom as shown in Figure 3. Refer to Tacoma Power standard C-SV-3200 for commercial data service requirements into the project. Conduit shall be Green (ML# 2948 Green – ColorMatrix), Schedule 40 PVC. Conduit size is 2” (typical) or 4”.

Secondary Service Power Conduit All secondary service conduits and its installation shall meet the requirements of the most recent version of the National Electric Code as directed by the Tacoma Power Electrical Inspection office. Minimum Grade of Acceptable Electrical Conduit is Gray, Electrical Grade Schedule 40 PVC or Rigid Steel.

Power Conduit Entry Electrical conduits entering the vault shall consistently enter the left side knockouts on all sides. This is for the training of cable in the vault to be in the same direction. The Tacoma Power Construction Office may approve exceptions on a site-by-site basis only.

Installation of Conduit (continued)

Figure #4 Top View / Conduit Termination

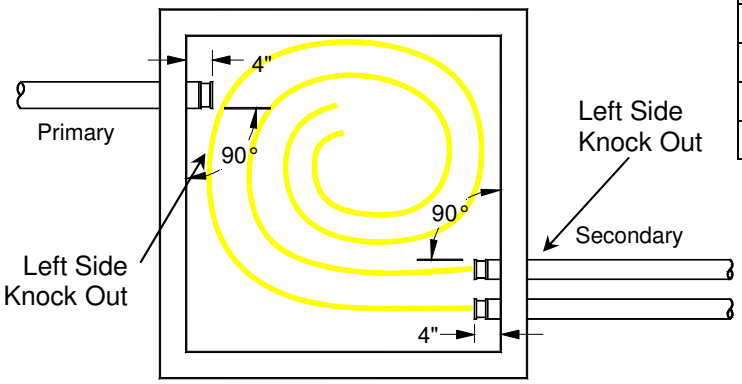

Transformer Size	Service Cable in Vault **[1]**
1Φ, 25–75 kVA	20 feet
1Φ, 100–167 kVA	25 feet
3Φ, 30–300 kVA	25 feet
3Φ, 500–2500 kVA	30 feet

[1] The Tacoma Power Construction Inspector may adjust required service cable lengths for certain vault/conduit configurations

Primary Power Conduit

The conduit for the primary conductors shall be 4" unless otherwise directed by Tacoma Power representatives. Minimum Grade of Acceptable Electrical Conduit shall be Gray, Electrical Grade Schedule 40 PVC or Rigid Steel.

Issue	Action
Termination of Conduit within Vault	The conduit shall be terminated horizontally through the left side concrete knockouts provided and sealed with grout (Refer to Figures 3 & 4). The conduit shall be perpendicular to the vault wall and extend 4 inches into the vault and terminate in a bell end. (Refer to Figure #4).

Termination of Power & Data Conduits beyond Vault

- The power and data conduits shall be terminated a minimum of 5 feet beyond the transformer vault.
- The conduits shall be capped prior to backfill in order to prevent the backfill material from entering the conduit.
- Mark the end of the power and data conduits with 2½ inch Schedule 40 PVC conduits. Both marker conduits shall extend vertically a minimum of 4 feet above grade and labeled with a *"Call Before Digging"* sticker. (Refer to Figure #3).

Trench Excavation and Backfill

These are the requirements for the excavation and backfill of trenches for conduit that extend up to the vault (Refer to Figure #3).

Secondary Service Trench

Issue	Action
Depth	As directed by the Tacoma Power Electrical Inspection Department. Generally a minimum of 24 inches of cover is required over the conduit.
Backfill	The trench shall be backfilled with clean fill or better as directed by the Tacoma Power Electrical Inspection Office.

Primary Trench

The depth of trench and backfill for primary conduits is listed below:

Issue	Action
Depth	A minimum of 36 inches of cover is required over the primary conduit. Exceptions may be granted by the Tacoma Power Engineer.
Backfill	The trench shall be backfilled with clean fill or better as directed by the Tacoma Power Construction Office.

Secondary Conductor

The service conductor shall be sized and installed by the customer per the requirements of the most recent edition of the National Electric Code (NFPA 70).

Termination Lengths

The minimum amount of service conductor to be installed within the vault for termination on the transformer shall be as listed below.

Vault Size	Transformer Size	Service Conductor Length per Run Required in Vault
4’ x 4’ x 3’6”	25 to 75 kVA	20 feet
4’8” x 4’8” x 3’6”	100 to 167 kVA	25 feet
4’8” x 4’8” x 3’6”	30 to 300 kVA	25 feet
7’ x 7’ x 3’6”	500 to 2500 kVA	30 feet

Service Cable Terminations

Tacoma Power will physically terminate all service conductors on the transformer connectors.

NOTE:	All ***excavation*** required by this standard shall conform to the requirements of WAC 296-155 Part N (Excavation, Trenching, and Shoring).
	Guard posts may be required by Tacoma Power to protect against damage due to vehicular traffic. Refer to Tacoma Power Standard C-UG-1400 for requirements for post construction and placement.

Sources & References

Sources Archived standard B-UG-416, S630.1150

References

- C-SV-3200 "Commercial Secondary Service"
- C-UG-1100 "Conduit Installations"
- C-UG-1400 "Padmount Equipment Guard Posts Installation"
- C-UG-2000 "Precast Concrete Vaults, Approved
- WAC 296-155 Part N, "Excavation, Trenching, and Shoring"