Customer Requirements
Pole Attachment Requirements for Telecommunications

Scope

This standard establishes the attachment requirements for utility pole structures between electrical supply facilities owned and operated by Tacoma Power and all other communication facilities owned and operated by others. Questions regarding this standard shall be directed to Tacoma Power New Services Engineering Office.

In This Standard

This standard contains the following topics

Topic	See Page
Definitions	1
Attachment Requirements	4
Attachment Approval	4
Codes	4
Cables & Guys	4
Multiple Attachments/Utilities	5
Climbing Space	5
Service Drops	6
Tagging	6
Pole Drilling	7
Equipment Mounting	7
Site Selection	7
Criteria for Selection of Poles	8
Location of Enclosures	8
Location and Attachment of Service Riser	8
Handholes at Base of Pole	9
Electrical Inspection	9
Grounding Requirements	11

Definitions

Abbreviations

The following abbreviations will be used in this standard

Abbreviation	Definition
TP	Tacoma Power
NESC	National Electric Safety Code, ANSI C2

Terms

The following are definitions of terms used in this standard

Term	Definition	See Figure:
Joint Utility	For the purposes of this standard, any entity (utility, public agency, communications company, or other) other than the electrical supply utility that is attached to the structure.	
Communications Space	The vertical space, agreed upon by joint use agreements, identified on the pole below the Safety Space onto which communication facility attachments can be made.	1
Safety Space	That space which originates generally at the lowest point of the supply space. This space varies in dimension from the structure to midspan and is related to normal operating voltage of the lowest supply facility. NOTE: This space is intended to maintain a physical separation between supply and communication facilities. The minimum dimensions of this space shall at no time be violated.	1
Supply Space	The vertical portion of the structure that contains the electrical supply facilities. Generally this space extends from the top of the structure to the lowest point that the electrical supply facilities extend. The lowest point may be: • Bottom of a bracket • Bottom of a piece of equipment (i.e., Transformer, Sectionalizer, Recloser, Capacitor, etc.) • Conductor • Top of a conduit riser for electrical supply conductors NOTE: Street Light conductors and hardware are excluded from this list.	1
Supply Neutral Conductors	Multi-grounded conductor for the supply system.	
Tag	Cable identity tag at each pole.	6

Figure No. 1 Illustration of Space Allocation on Pole

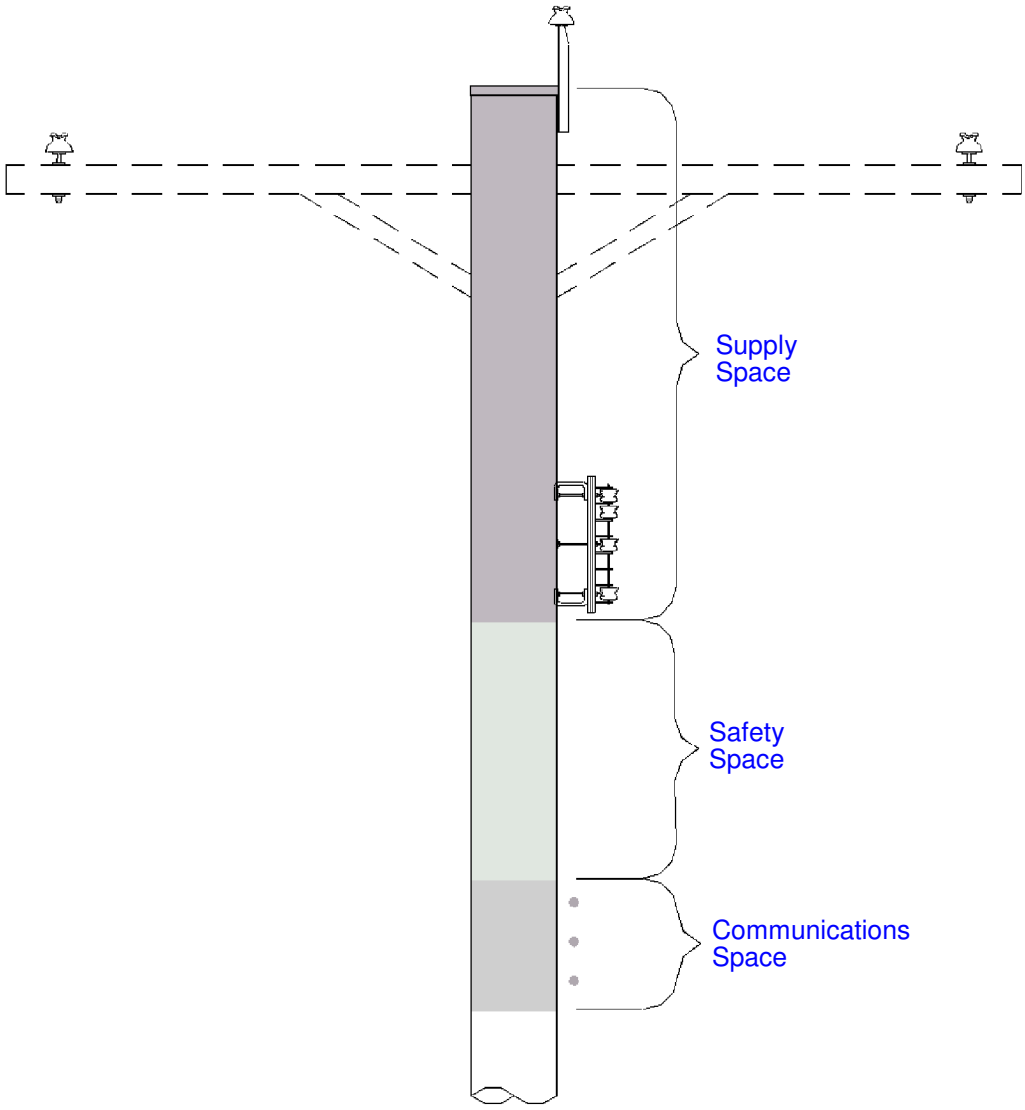

Attachment Requirements

Attachment Approval

Prior to attaching facilities to poles owned by TP, a pole attachment agreement must be signed by all parties involved.

Note: Attachments within the city limits of Tacoma must meet the requirements of City of Tacoma Ordinance number 16.01.60.

Codes

All attachments must meet the requirements for clearance and strength as specified by the NESC along with requirements set forth by the State of Washington, Pierce County, and local governments.

Cables & Guys

These are requirements for joint utilities' cables, messengers, and guys

NOTE: Clearances on joint poles are specified in TP Standard C-OH-9000.

<table>
<tr><th>For</th><th>Do This</th></tr>
<tr><td>Cables
&
Messengers</td><td>Attach to the same side of the pole as the supply neutral conductor.
<table>
<tr><th>If …</th><th>Then…</th></tr>
<tr><td>The supply neutral is on a primary crossarm</td><td>Communications cables shall be installed on the road side of the pole</td></tr>
</table>
Tension and/or guy the cable and/or messenger so that:
• the angle of the existing structures is not altered
• the sag characteristics of the supply conductors and existing communications conductors are not altered
• all clearances are maintained as required by applicable codes</td></tr>
<tr><td>Guys &
Anchors</td><td>Install guying as required by system requirements or at the request of TP.

Install own anchors as required. Attachment to existing TP anchors will require prior approval by TP.</td></tr>
</table>

Multiple Attachments/ Utilities

Joint utilities are encouraged to use the least amount of space possible on the pole. The figure #3 below shows various methods of support (extenders) that may be used for multiple attachments. This figure does not intend to be inclusive of all support options available.

Note: Within the City of Tacoma the City Manager must approve the use of support arms (extenders) prior to installation. Refer to City of Tacoma Ordinance 16.01.60 (A6).

Figure No. 3 Multiple Attachment Supports

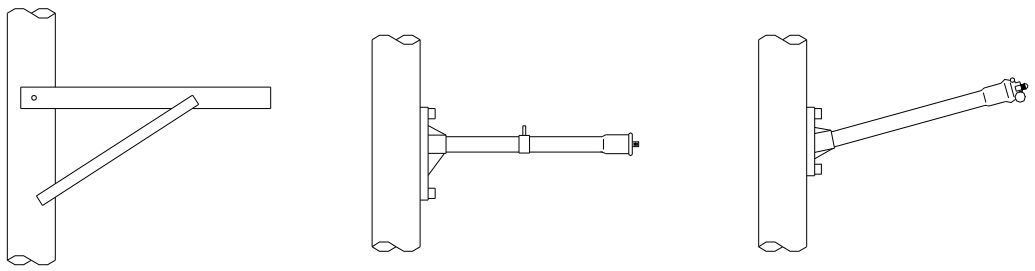

Climbing Space

Unless specifically designated by *Tacoma Power* all poles shall be climbable. Climbing space will be determined by the location of existing conductors, enclosures, attachment hardware, and risers. When existing facilities have limited or eliminated climbing space a best effort should be made to keep and/or create climbing space on the pole from grade through the communications space.

When parallel communications conductors are installed on both sides of the pole a minimum separation of 24" is required to allow workers to climb through per NESC Section 236.

Figure No. 4
Climbing Space

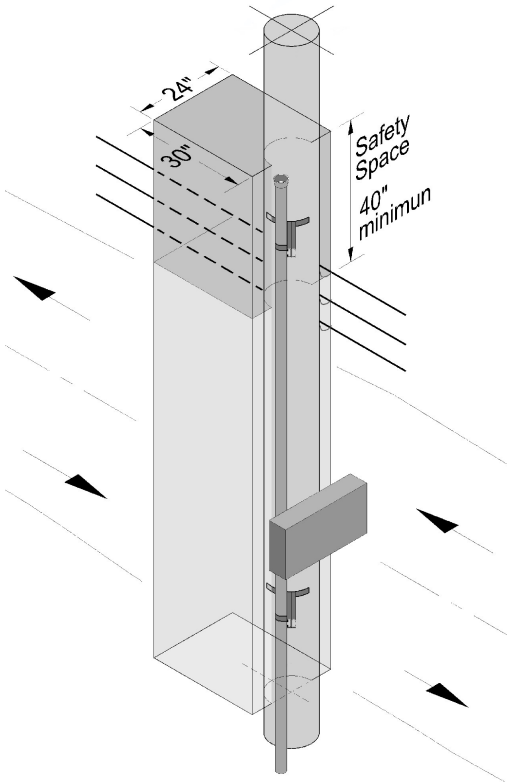

Service Drops Service drops shall not violate the climbing space as set forth in Rule 236G of the NESC.

Figure No. 5 Service drop boundary for climbing space

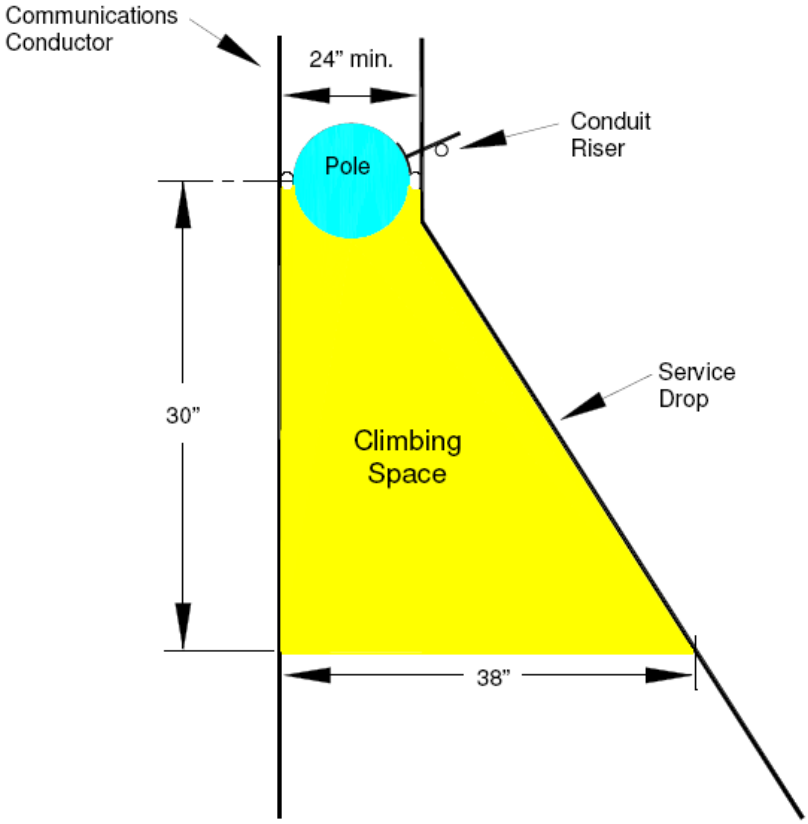

Tagging Communication companies are required to install a tag on their cables ***at each pole***. This benefits crews during pole replacements, repairs, and emergency service providers during emergencies. Tacoma Power has assigned identification codes to the organizations (identical to Seattle City Light, when applicable) as listed below.

Code	Organization
001	Click!
002	Tacoma Fire
003	Tacoma Traffic Signal
004	Comcast
005	Qwest
006	Rainier Group
007	Port of Tacoma
008	Franklin Pierce School District
009	Clover Park School District
010	Bethel School District

Code	Organization
011	Pierce County
012	City of Lakewood
013	City of University Place
014	Electric Light Wave
015	Sprint
016	360 Networks
017	Tacoma Water
018	University of Washington
019	City of Fircrest
020	City of Fife

Pole Drilling Holes drilled into poles shall follow the table below. Refer to Figure No. 6.

Activity	Description
Holes on same side of pole	Holes on the same side pole shall be no closer than 6”.
Holes perpendicular to each other	Holes that are perpendicular shall be no closer than 3”.
Hole Treatment	All holes drilled through Douglas Fir poles shall be treated with TP’s current approved preservative. Holes drilled through Cedar poles do not require treatment.

Figure No. 6 Pole drilling.

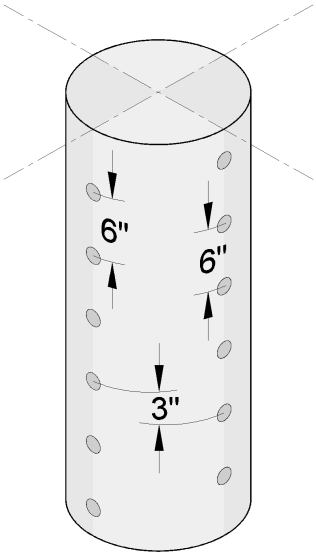

Equipment Mounting

Site Selection Poles locations selected for enclosure attachment shall be forwarded to the TP *New Services Engineering Office* for review.

Enclosure Weights The Automated Meter Reading (AMR) amplifier weighs approximately 38 lbs.

Criteria for Selection of Poles

Enclosures ***should not*** be mounted on TP Poles that are in the following conditions.

- Deadend or Double Deadend Corner Poles with or without anchors.
- Poles that have supply Buck Leads (Primary lines extending in three directions)
- Poles with switch handles that extend below the communications zone
- Poles that have existing equipment boxes such as
  - ⇒ Control boxes for TP equipment
  - ⇒ Other power supply, battery, etc.

Enclosures ***should*** be mounted on clean tangent poles when possible.

Location of Enclosures on Pole

Enclosures to be mounted on a TP pole should follow requirements listed below (Refer to Figures #7 & 8):

- Mounted under the transformer or other pole device.
- If no power device exists, then mount enclosures in line with the OH primary conductors and under the primary crossarm. In the absence of a crossarm, mount the enclosure under the primary conductor and on the gain or pole tag side of the pole.
- *No closer than 3"* from the surface of the pole
- Any power supply cable should be greater than 8 feet from the ground.
- Enclosures mounted on poles with underground risers must allow at least a minimum of a ¼ of a pole for climbing space (Refer to Figure #4).

Location and Attachment of Service Riser

Enclosures that require electrical service supplied by TP shall extend a service riser as follows (Refer to Figures #7 & 8):

- **If standoff brackets are already installed on the pole, the new riser(s) shall be attached to these standoffs**
- When possible attach the riser within the field side half of the pole.
- The conduit shall be *no closer than 4"* to the pole.
- The conduit should be extended to but *no closer than 40"* of the supply space. The additional *conduit, conductor, and stand-off brackets* required to extend into the secondary electrical space shall be supplied on the pole for TP to complete. Confirm with *TP T&D Construction Office.*
- One stand-off bracket shall be supplied for every 10 feet of conduit. A stand-off bracket should be mounted within 6 inches of top end of the conduit.

Handholes at the base of a Pole

Subsurface handholes (Boxes) and pedestals for the storage of batteries and other equipment should be located to either the road or field side of the pole. They should not conflict with the future replacement of the pole.

When the handhole must be placed in line with the pole it should be located on the transformer, primary crossarm, or other power equipment side of the pole.

Electrical Inspection

Electrical service for Enclosures shall be inspected and approved by the TP *Electrical Inspection Office* prior to energization.

Figure No. 7

Attachment requirements for Risers and Enclosures

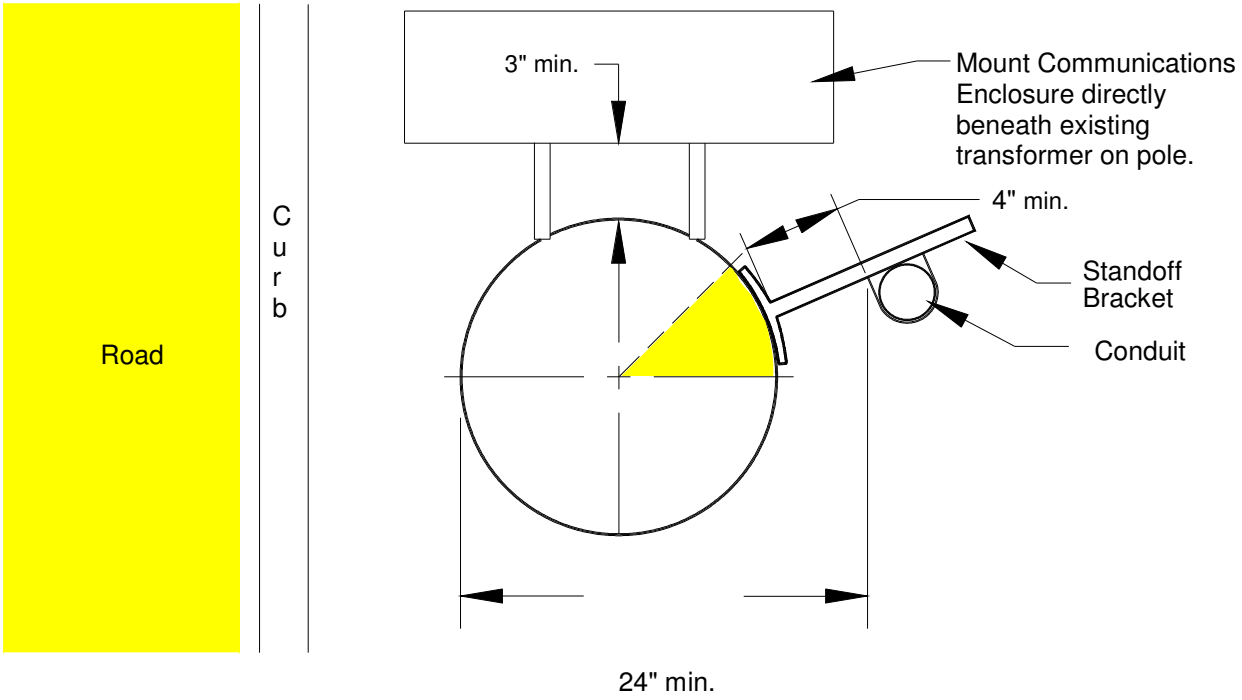

Identification of Communication Enclosure

All communications enclosures must have a reference number and/or physical address permanently labeled on its exterior. One inch reflectorized stickers are recommended on the road side surface of the enclosure.

NOTE: Reference numbers along with the physical address of each enclosure must be included with the application for electrical service

Figure No. 8 Pole mounting of Communications Enclosure

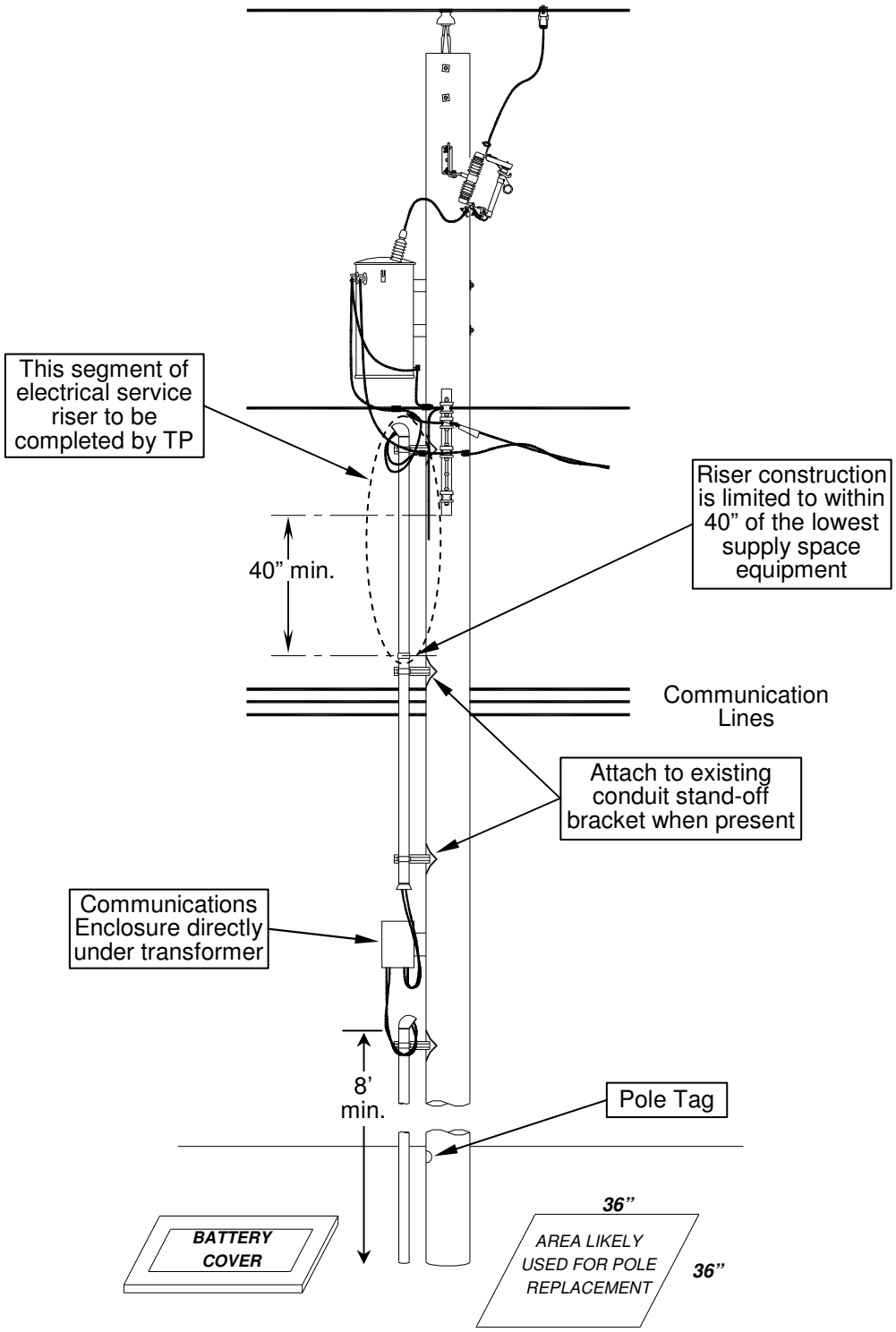

Grounding Requirements

Metallic Messenger Bonding

Metallic and/or conductive messengers shall be bonded to the pole grounds as listed below:

Activity	Description
Number of bonding points	The messengers shall be bonded per the requirements of the NESC to the pole ground.
Who makes the bonding connection.	The attaching utility shall make and maintain all bonding connections for their messengers and equipment.
Who supplies the pole ground.	TP installs and maintains all pole grounds. NOTE: If a pole ground is not available contact the TP Power Overhead Section for assistance.

Nonmetallic Messengers

Bonding requirements of equipment and messengers are governed by the NESC. If the messenger meets the requirements of the NESC as nonconductive (i.e.: Kevlar-type) bonding is not required.

Figure No. 9

Grounding of communications conductors at supports

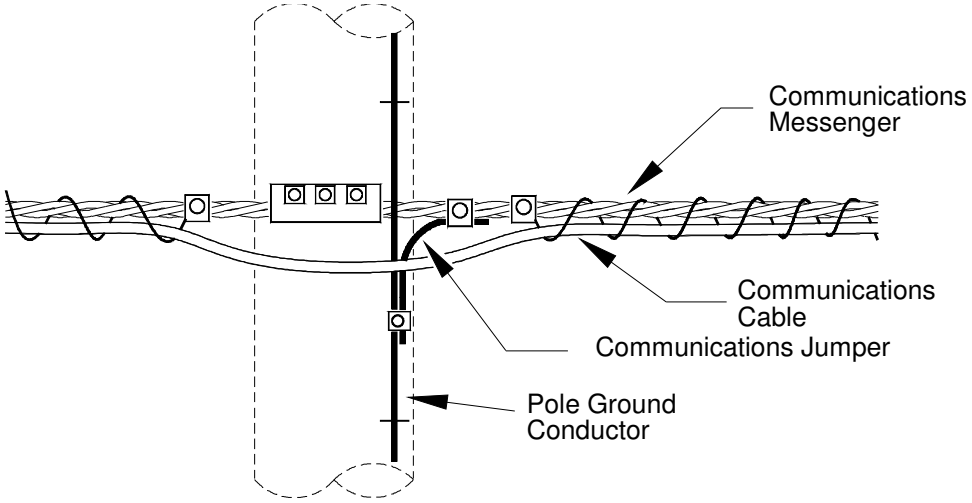

Enclosure Grounding

All enclosures shall be bonded to existing pole grounds. Those enclosures requiring electrical service (amplifiers, power supplies) shall be grounded per NEC 250. (Refer to Figure #10)

Figure No. 10 Grounding of Amplifier Boxes

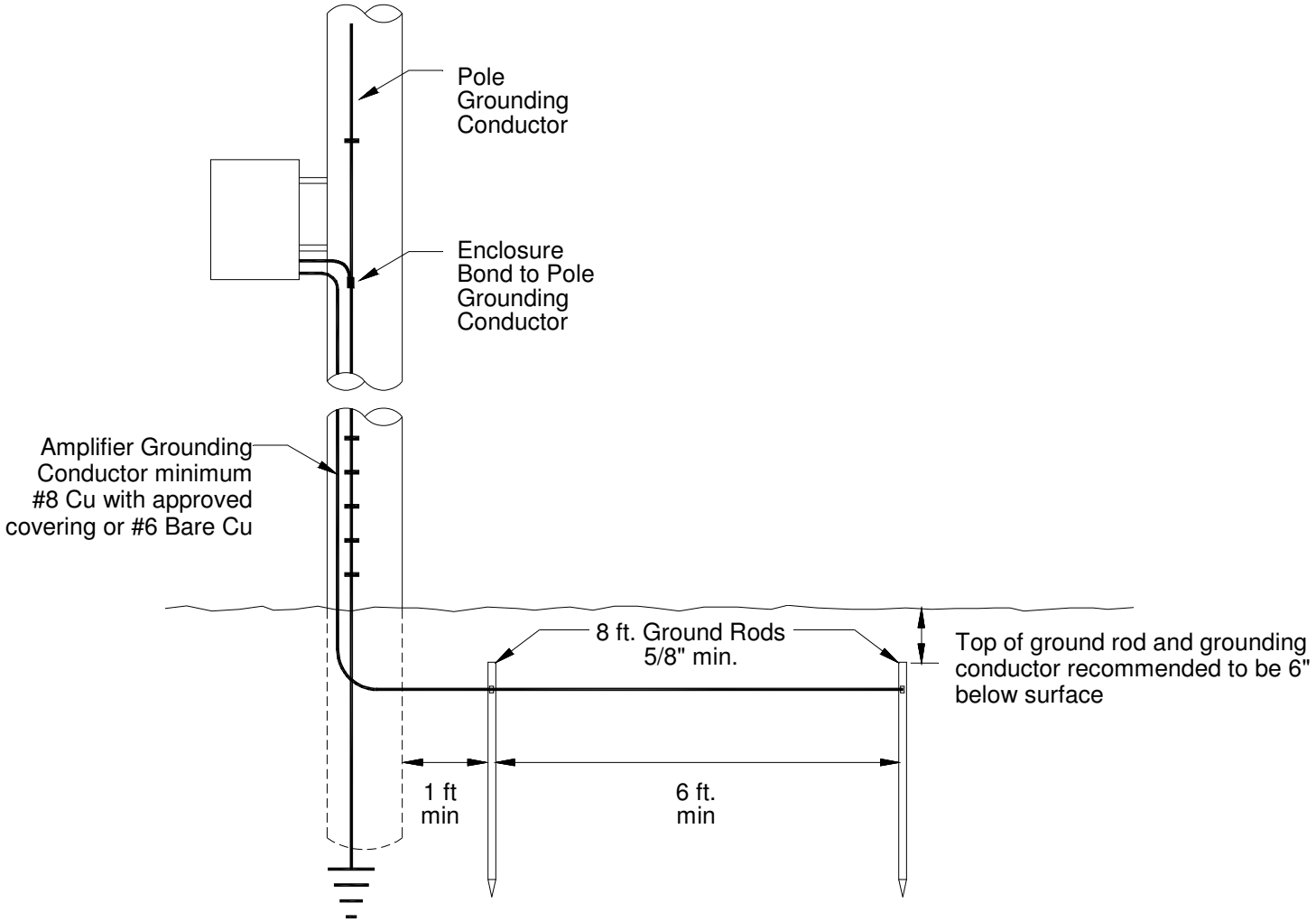

Sources

NESC, ANSI C2-1997 - Sections 234, 235, 238
NEC, NFPA 70, Rule 250-84 & Table 250-94

References

Customer Requirement Standard C-OH-9000, "Clearance Requirements for Overhead Joint Utility Construction"